MAX TECHNOLOGIES
Weighing Solutions

Model MT 4110

Disk Type Load Cells

WAZAN.PK
WEIGHING DELIVERED WITH PRECISION

FEATURES

- Rated Capacities (lb):
  5000 20000 40000 50000 60000
- Rated Capacities (kg):
  2500 10000 20000 25000 30000
- Integrated Static Overload Protection
- Hermetically Sealed
- Stainless steel,

APPLICATIONS

- Weighing hopper scale system
- Truck Weighbridge

Rated Capacities (lbs.):	5000 20000 40000 50000 60000
Rated Capacities (kg):	2500 10000 20000 25000 30000
Rated Output(mV/V)	2.00±0.02 mV/V
Nonlinearity	±0.05%FS
Hysteresis	±0.05%FS
Repeatability	±0.02%FS
Creep(30 minutes)	±0.02%FS
Zero balance	±1.00%FS
Temperature effect on zero	±0.02%F.S./10℃
Temperature effect on output	±0.02%F.S./10℃
Input resistance （Ω	750±10
Output resistance （Ω	700±5
Insulation resistance	≥5000MΩ 5V-
Excitation voltage	10V(DC)
Compensated temperature range	-10~+50℃
Operating temperature range	-20~+60℃
Safe overload	120%FS
Breaking loading	150%FS
Cable	Φ5.4 X 6M

The technical data given here serve only as a product description and must not be interpreted as guaranteed characteristics in the Legal sense.

Model MT 4110

MAX TECHNOLOGIES

WAZAN.PK
WEIGHING DELIVERED WITH PRECISION

OUTLINE DIMENSIONS:

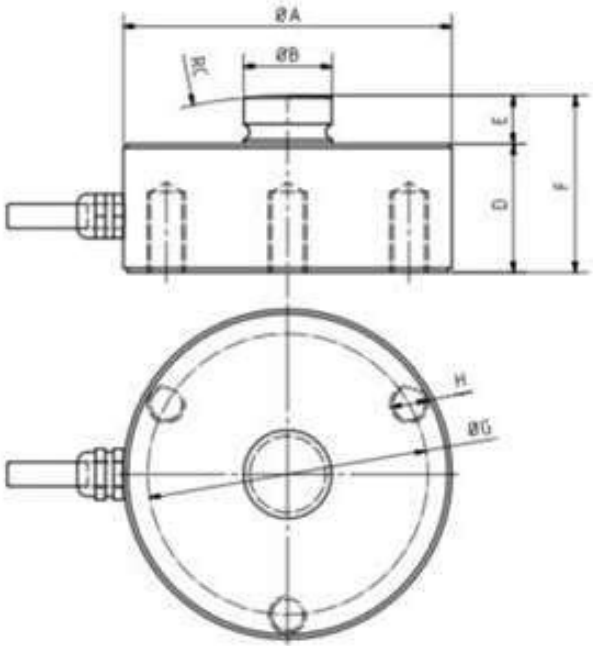

C.N. (f)	A	B	C	D	E	F	G	H
2.5.12.5	82	22	130	32	12	44	70	M8
20. 30	126	35	200	40	14	54		

Dimensions (mm)

WIRING

Function	Colors
+ Input	Red
- Output	White
+ output	Green
- Input	Black

Correct Mounting of Load Cells Is Essential To Ensure Optimum Performance.

3193 N, Drinkwater Blvd, P.O.Box 32662, Scottsdale, AZ 85251, U.S.A

Phone: # 480-240-1299
Fax: # 480-240-1300
Email: Info@themaxtechnologies.com

Max Technologies reserves the right make changes to the technology, features, specification and design of the equipment without notice.