WAZAN.PK
WEIGHING DELIVERED WITH PRECISION

XK3101(N)

Weighing Meter User Manual

ATTENTION ESD

This controller for electrostatic sensitive equipment
Please pay attention to take measures to prevent electrostatic measures in the use and maintenance

WARNING

1、The person who debugging detection and maintenance must be professional
2、 This product belong to a precision measurement equipment Please be sure to keep the equipment good ground

ATTENTION

1、 It is strictly prohibited to charged plug
2、 First you need to cut off the power and Wait for about 5 seconds then connect the equipment

Table of Contents

1.0 OVERVIEW ---------- 1

1.1 KEY FEATURES ---------- 1
1.2 TECHNICAL SPECIFICATIONS ---------- 1

2.0 INSTALLATION ---------- 2

2.1 METER FIXED ---------- 2
2.2 ELECTRICAL CONNECTION ---------- 2

3.0 DISPLAY PANEL ---------- 5

4.0 CALIBRATION ---------- 5

4. 1 PARAMETERS DETERMINED ---------- 5
4. 2 CALIBRATION PROCEDURE ---------- 6

5.0 ANALOG OUTPUT TYPE SELECTION AND ADJUSTMENT ---------- 9

5. 1 OUTPUT TYPE SELECTION ---------- 9
5. 2 TO ADJUST THE ANALOG OUTPUT AT THE BOTTOM AND THE TOP ---------- 10
5. 3 TO RESTORE THE ANALOG OUTPUT AT THE BOTTOM AND THE TOP ---------- 10

6.0 METER WORKING PARAMETERS F2 ---------- 10

6. 1 OPTION ENTER INTO THE WORKING PARAMETERS OPTION ---------- 10
6. 2 FUNCTION F2 OPTION PARAMETER GROUP ---------- 10

7.0 RELAY OUTPUT ---------- 12

7. 1 RELAY OUTPUT MODE SETTING PROCEDURE ---------- 12
7. 2 INPUT PRESET VALUE (RELAY COMPARISON VALUE OUTPUT) ---------- 12

8.0 THE SERIAL INTERFACE SETTING ---------- 13

8. 1 SETTING PROCEDURE ---------- 13

9.0 POST INFORMATION ---------- 13

10.0 ERROR MESSAGES ---------- 13

11.0 GENERAL TROUBLESHOOTING ---------- 14

APPENDIX 1 COMMUNICATION PROTOCOL MODBUS RTU ---------- 15

APPENDIX 2 COMMUNICATION PROTOCOL - CONTINUOUS MODE ---------- 16

APPENDIX 3 COMMUNICATION PROTOCOLS – COMMAND MODE ---------- 17

APPENDIX 4 PACKING LIST ---------- 18

1.0 General Description

XK3101(N) is a weighing indicator which is applies for an industrial control fields。(or other applications with analog output). It combines weight display and analog signal together. Its signal transaction of former part adopts high-precise A/D converter with 24 bits, and the output of analog signal adopts D/A converter with 16 bits. Its shell is a small box made from aluminum, easily to be inserted into control cabinet. It can be widely used in cement, chemical and metallurgical industrial weighing systems.

1.1 Main Specification

* Σ-△ A/D conversion， resolution：24 bits
* Updating rate can choose: 6.25 Hz、12.5 Hz、25 Hz、50 Hz
* Two-point (open) relay output, output mode can be set: in function F5
* Isolated digital communication interface, RS232 or RS485 can be selected
* Three calibration methods, suitable for calibration in many application
* Can set analog output mode: 4～20mA、0～20mA、0～5V or 0～10V
* 7 bits LED display, word height 0.56 inch
* 20 segments of light pole display
* Stand-alone interface with big display show

1.2 Technical Parameters

1.2.1 Loading Capacity:

Excitation voltage: 5.0 VDC, connect 6pcs of 350Ω analog load cells
Analog current output: not more than 500Ω
Analog voltage output: not less than 200 KΩ
Relay contact capacity: AC 2A / 250V, DC 5A / 120V

1.2.2 Performance

Input sensitivity: more than 1.5uV/d
Non-linearity: better than 0.01%FS

1.2.3 Power supply

Voltage range of power supply: AC 220V, frequency is 50Hz/60Hz, maximum power consumption is 6 Wwatt. Good ground wire is necessary, and don't share the power supply with other equipments, if the equipments with high-power. Besides ,relay and heater .etc which can easily causes noise.

1.2.4 Temperature and humidity

Working temperature: 0℃~40℃， less than 85％RH, no condensation.

Saving temperature: -20℃~60℃，less than 85％RH, no condensation.

1. 2. 5 Outline size(mm) 87×172×105

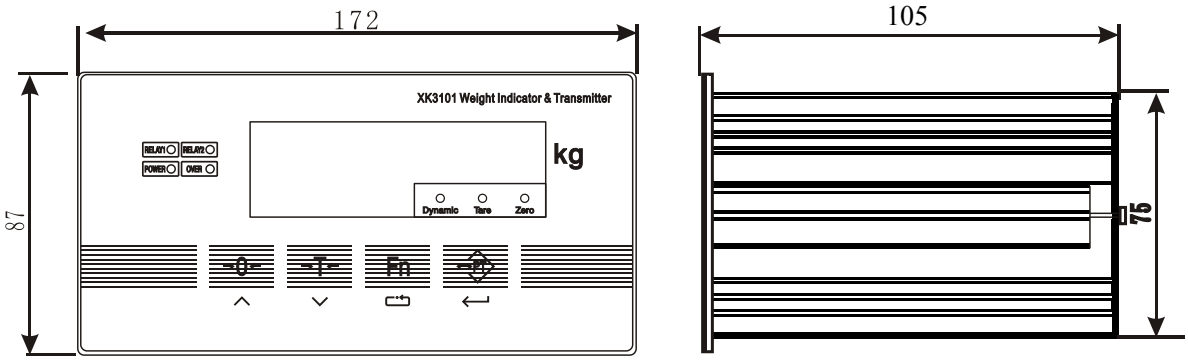

1. 2. 6 Net weight（kg）： about 0.96

2.0 Installation

2.1 Indicator fixation

It adopts panel installation, no thicker than 2mm for cabinet is requested. Hatch dimensions of cabinet are as below: (unit: mm)

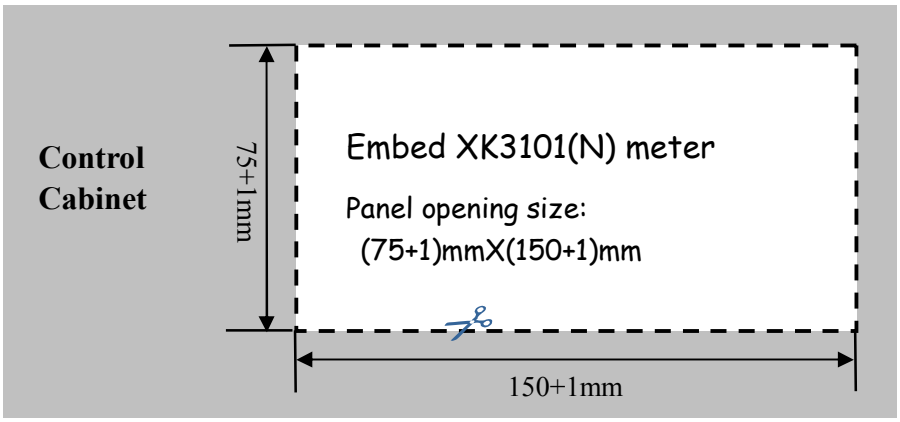

Before installation, mandril of both sides of housing should be removed firstly, and then put into the cabinet from the front side. The two mandrils are fixed to both sides of indicator tightly to guarantee the firm installation. The depth of cabinet is not less than 180mm, easy for wire connection.

2.2 Connections

2.2.1 Back view of indicator

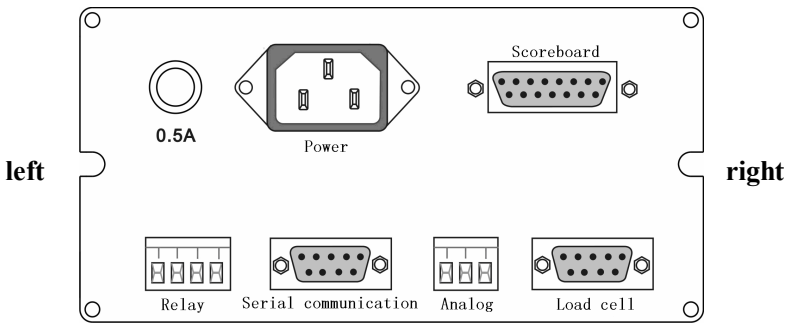

2.2.2 Power supply connection

It adopts AV 220V, a fuse of 0.5A, φ5×20(mm). Check power supply before connection.

Remarks: power supply is AC 110V for some customized indicator, details see the marks on indicator

2.2.3 Load cell connection

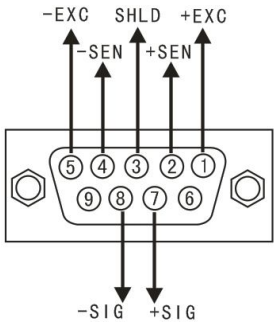

Indicator part

Specification		
Pins	Name	Code
1	Excitation +	+ EXC
2	Feedback +	+ SEN
3	Shield	SHLD
4	Feedback -	- SEN
5	Excitation -	- EXC
7	Signal +	+ SIG
8	Signal -	+ SIG

▲If use four wire cable, **+ SEN** and **+ EXC**, **-SEN** and **- EXC** must be short connected,

▲Connection for load cell to indicator and shield cable to ground must be reliable.

▲Connecting wire mustn't be put in and out when indicator is being electrified;

▲Avoiding ESD makes damage to indicator or load cell.

▲As load cell and indicator belong to ESD sensitive equipments, must be careful when used.

▲Electric welding or other strong electric operations are prohibited on scales. Action to prevent damage caused to load cell and indicator from thunder and keep Safety for both operators and weighing

2.2.4 Serial port connection

It has two communication modes RS232 and RS485. Both modes can be used simultaneously when serial port transmits data and the data formats are the same in the bus. Just one of them can be chosen when serial port receives command data. The fallowing definition of foot:

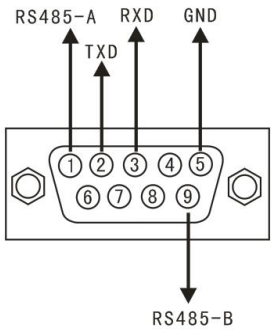

Indicator part

Specification		
Pins	Name	Code
1	RS485 positive part	RS485-A
2	RS232 Transmit	RS232-TXD
3	RS232 Receive	RS232-RXD
5	Signal ground	GND
9	RS485 negative part	RS485-B
7-8	Pin 7 and pin 8 be short-connected means calibration switch is valid	
Others are empty, external plug not connect with any wire		

！ Must not put in or out while it is electrifying

！ Professional person connect and debug serial port

！ Indicator must connect to ground reliably.

2.2.5 Analog output connection

	Specification
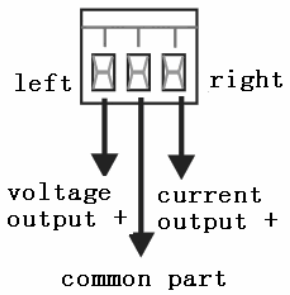	Indicator can choose voltage and current output. Connecting wire uses in-out connection end. The middle part is the common part for analog signals. Output of voltage and current are connected to different ends. **! Indicator can not output voltage and current signals at the same time, it can be chosen one of them when use it (can be set by parameter F4)**

2.2.6 Relay Output

	Specification
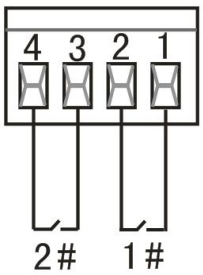 Indicator Side	1. By the view of panel on back side of indicator, NO.1 and NO.2 means 1# relay output, NO.3 and NO.4 means 2# relay output, 1# relay and 2# relay are both open contact, 2.Action mode of relay and comparative value can be set by F5 parameter

2.2.7 Big display and External buttons

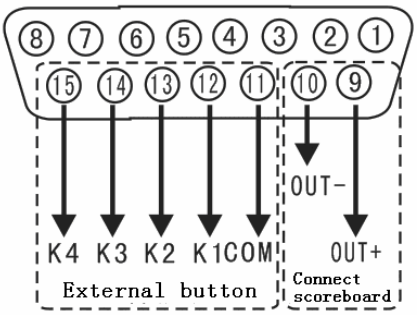

Indicator Side
With DB-15 pins

Specification		
Pins	Name	Code
9	current loop positive (input)	+OUT
10	current loop negative (output)	-OUT
11	common part of external buttons	COM
12	【PT】 button	K1
13	【Tare】button	K2
14	【Fn】 button	K3
15	【Zero】button	K4

Connection with our scoreboard:

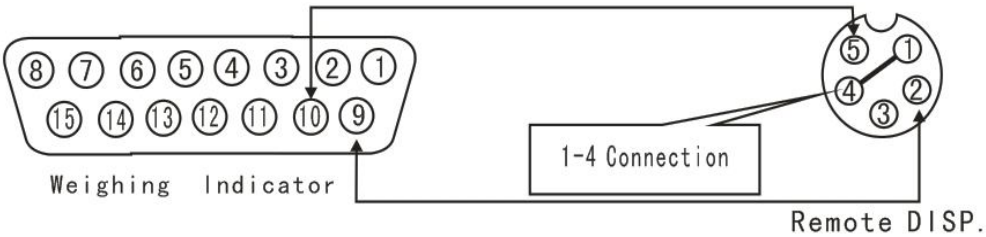

2.2.8 External Button Port

K1-K4 short connect with COM for 30 millisecond, it means the button is valid, the functions of external buttons and buttons on panel are the same.

3.0 Display Panel

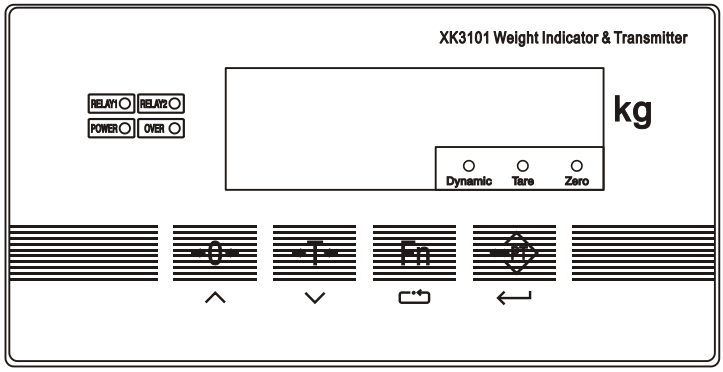

The indicator has four buttons on display Panel, used for all operations and parameters set-up for indicator.

Zero button, it is value increased button when in set-up state.

→0← **Tare button**, return (or value decreased) button, when in set-up state.

→T← **Function button**, it is a selective button when in set-up state.

Fn **Enter button**, it is a enter button when in set-up state.also is a shortcut key and you can modify the value with relay out put

↔PT cating lights:

1# replay indicating light: RELAY 1

2# relay indicating light: RELAY 2

Power supply indicating light

Weight data unstable indicating light

Tare indicating light

Zero indicating light

4.0 Calibration

4. 1 Parameter confirmation

Several parameters need to be confirmed before calibration, including **Maximum weighing value, maximum division** and **division value**.

The formula is Maximum weighing value = Maximum division * Maximum division value.

The divisional reading usually is from 1000 to 10000, divisional value is 1*10n, 2*10n or 5*10n and n selects value as -3, -2, -1, 1. At a fixed maximum weighing value, choosing a suitable divisional value must guarantee that uV of each division is more than or equal to 0.5uV/d. Calculation of uV/d is as following formula:

$$uV/d = \frac{\text{Division value(kg)} * \text{sensitivity of load cell output (mV/V)} * \text{excitation voltage (5V)} * 1000}{\text{capacity of load cell (kg)} * \text{quantity of load cell (pcs)}}$$

Generally, the sensitivity of load cell is 2 mV/V. The exact parameters please take manual of load cell for reference.

4. 2 Calibration steps

Calibration should be operated by professional technician. If it is scale applied for commercial scales, it should be operated under supervision of Legal Metrology Institution as well. The calibration plug must be put in during calibration (put in serial interface position), and also the relative weights or replacement must be prepared in advance.

If "E 2" appears when choosing parameters, it means that the calibration plug is not put in. Remove the calibration plug and keep it for future use after calibration completes.

4.2.1 Choose calibration methods

1. Press 【→0←】and【Fn】simultaneously, indicator shows "F1"

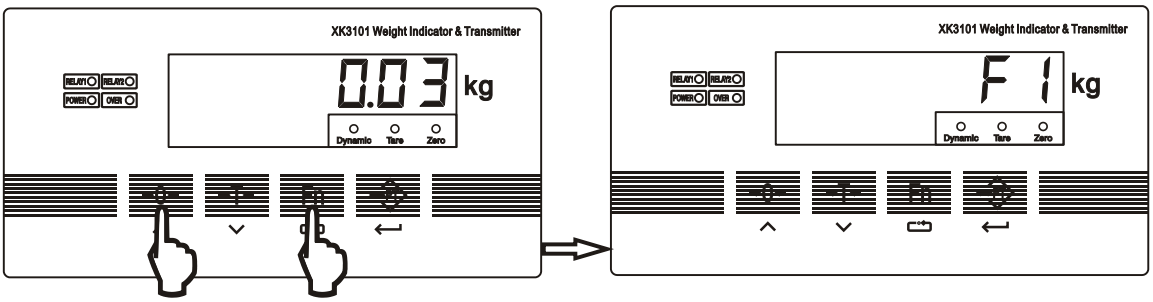

2. Press【PT】button, indicator shows "CAL X", "X" means the previous calibration method.

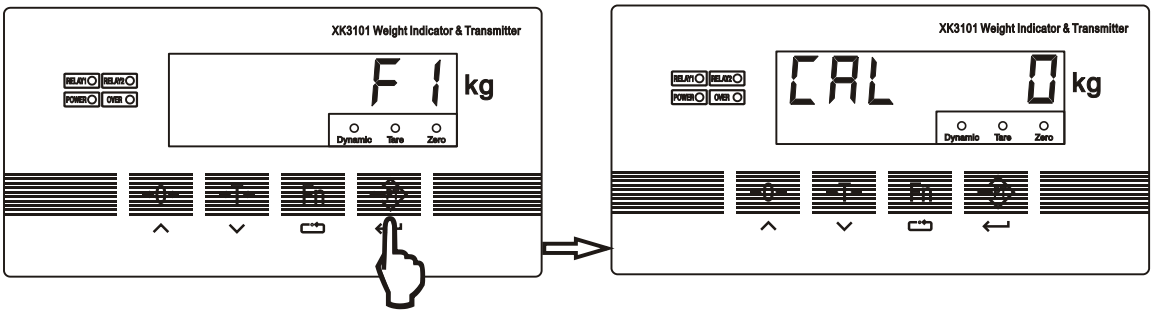

3. Press【Fn】button to choose appropriate calibration method.

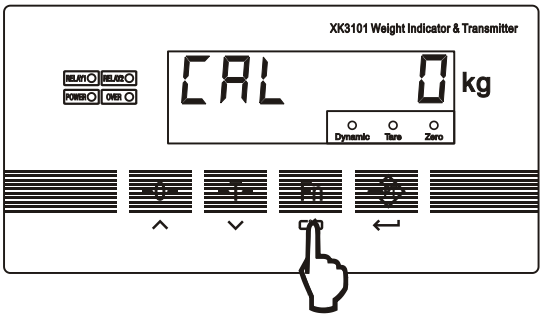

4.2.2 Calibration method 1 (CAL 0, weights calibration)

Step①: Press【Fn】button to select calibration method,

indicator displays "d 10", the value means the previous division value,

Press 【Fn】 button to choose appropriate division value. Press【PT】to **Step②**

Step②: Indicator displays "C 0 0 3 0 0 0", this value is the rated range of senser, by press 【Fn】 button and the lowest bit glitters then you can press【Fn】choose the edit bit and press【→0←】 button to input rated range. after finished input,you can press【PT】 to step③

Step③: Indicator displays "n o L o A d", means the indicating calibrat zero, please confirm it is empty scale, then press 【PT】button, indicator displays "- - - - - - -", at the same time, the light bar under the display are all light up, if the indicator collecting data is stable, and the light bar will die out one by one, if the light bar are bright all the time, you need to check the scale platform if shaking,else if the wire of sensor are connected with wrong,or the feedback wire is not connected, the light bar will bright all the time, if you correct ,it will auto into **Step④**;

Step④: Indicator displays "A d d L d 1", that means need to load weights to the scale platform,and press 【PT】 button when the scale is stable, indicator displays "- - - - - - -", at the same time, all light bar are bright, if indicator collecting data is stable,and the light bar will die out one by one. otherwise the light bar will bright all the time. then if it displays "E 8"it means the signal of load cell need to inversion, the indicator will display "A d d L d 1"again, at this time, need to check load cell loading structure and wire connection, if all is correct, at the same step the indicator will displays a number like "3 0 0 0",then you should input your actual loading weights ,after that press【PT】button to **Step⑤**,

Note:you can press【Fn】button and 【→0←】button to input number and press【PT】to confirm

1. *if input incorrect weight, equal to 0 or more than rated capacity, indicator will display "E 7";*
2. *if display "E 4", it means that each division value is less than 0.5uV*

Step⑤: Indicator displays "A d d L d 2", means the second non-linearity correction. If this orrection is needn't, you can press【→0←】button to exit, and finished calibration. Otherwise, continue to load weights to the sale platform, then press【PT】to confirm, indicator displays "- - - - - - -", at the same time, all light bar are bright, if indicator collecting data is stable, and the light bar will die out one by one. If go on successfully,and will display a number like "3 0 0 0", then you should input your actual loading weights ,after that press【PT】button the indicator will display "PASS" and finished calibration。

Note:you can press【Fn】button and 【→0←】button to input number and press【PT】to confirm

1.If input incorrect weight, equal to 0 or more than rated capacity, indicator will display"E 7";

2.If displays "E 9", It means that have difference calibration rates compared with two non-linearity correction range and exceeds maximum more than 20%.It is not normal for common scales; the mechanical structure should be checked, for example limiting device, etc. If it is normal, the indicator displays "PASS", weights calibration completes.

Tip 1: If the zero to be changed of load cell by exceeds the power on zero setting range or manual zero setting range, it can re-correct zero, according to calibration process to the step 3, press 【→0←】button to exit when it displays "A d d L d 1".

Tip 2: Skip zero, add weights for calibration directly, according to calibration process to the step 3, displays "NoLoAd", press【Fn】button not 【PT】. the indicator displays "Add Ld 1", if weights are on the scale platform already, press 【PT】directly to confirm, input weights value, it is ok.

4.2.3 Calibration method 2（CAL 1，enter parameter method）

There are two purposes of parameter input method:

1.calibration parameter manual recovery; 2.calibration parameter manual change.

The calibration plug must be inserted in the changing process (insert in the serial port position)

Parameter input method:

1. Press【→0←】and【Fn】simultaneously, indicator displays "F1 "
2. Press 【PT】button, indicator displays "CAL 0", The number may be 0、1、2，now you can press【Fn】button, to choose "CAL 1";
3. Press 【PT】button, indicator displays "d 10", press 【Fn】to choose division value
4. Press【PT】button，indicator displays"C 003000", press【Fn】to choose glittering position, press 【→0←】to change number to input rated capacity
5. Press【PT】button，indicator displays"L 1", Press【Fn】 to input add-loading points (one segment or two segments)
6. Press【PT】button，indicator displays"C 1" first，then displays calibration coefficient of first segment, press【Fn】to choose glittering position, press 【→0←】to input number
7. Press【PT】button，indicator displays"C 2" first，then displays calibration coefficient of second segment; press【Fn】to choose glittering position, press 【→0←】to input number to change calibration rate; if L=1（one add-loading calibration）the coefficient of second segment can be ignored, not necessary to input
8. Press【PT】button，indicator displays "CF 1" first，then displays ISN of the first add-loading point, press【Fn】to choose glittering position, press 【→0←】to input number
9. Press【PT】button，indicator displays"CF 0" first，then displays ISN of zero, press【Fn】to choose glittering position, press 【→0←】to input number
10. Press【PT】button，indicator displays"- - - - - - -"，calculate and save data,the process finishes.

Tip 1: method of coefficient amendment for tiny adjustment of weight

For example: supposing the weights are 1000kg on the scale, indicator displays 997kg, so the calibration coefficient need to increase 1000÷997, equals about 1.00301, original calibration coefficient is 0.04206, need to increase coefficient 0.04206 by 1.00301 times to be 0.04219, it is ok.

Tip 2: Method of coefficient amendment for adjustment of working zero

For example: A large storage tank, because of mechanical structure or load cell loading status changes, lead to zero changes a lot, weight displaying is not correct, the tank can not clear to re-calibrate zero, adjust it by manual input zero ISN method.

For example: The tank has material, estimate 60000kg according to volume, but real display is 61000kg, if continue to add material 1000kg, the display will increase 1000kg simultaneously, thus it means that the incorrect weight is caused by zero changes, it can correct by changing zero ISN, increase zero by 1000kg. For example, original zero ISN "CF 0"is 50045, calibration coefficient C1 is 0.09200, zero ISN need to increase 10869（1000÷0.09200），change zero ISN 50045+10869=60914, it is ok.

4.2.4 Calibration method 3（CAL 2， scale parameter input method）

Calibration plug must be inserted in calibration process (insert in serial port position)

1.Press【→0←】and [Fn] buttons simultaneously, indicator displays “F 1”

2. Press【PT】button，indicator displays“CAL 0”，numbers maybe 0、1、2，
press【Fn】button，display“CAL 2”；

3. Press【PT】button，indicator displays“d 10”，press【Fn】to choose division value；

4. Press【PT】button，indicator displays“C003000”，press【Fn】to choose glittering position, press【→0←】to change number to input rated capacity;

5. Press【PT】button，indicator displays“LC_CAP” first，then displays total capacity of load cells, for example, 4pcs of 20t load cell，need to input 80000kg，input method：press【Fn】to choose glittering position, press【→0←】 to input number；

6. Press【PT】button，indicator displays“LC_SEN” first，then displays load cell sensitivity, for example, 2.0mV/V，need to input 2.0000；

7. Press【PT】button，indicator displays“_ _ _ _ _ _”，calculate and save data, process finishes. The self-weight of scale can be removed by zero calibration. Because of scale installation, side load and other factors, the displayed weight will be a little different; it can use this method to calibrate it if accuracy is not highly required.

5.0 Choice and adjustment of analog output modes

5.1 Choose output mode

Analog output can choose one of the following modes: 0—20mA、4-20mA、0-5V and 0-10V.

Choose according to the following steps:

1. Insert calibration plug (if not insert, it will display “E 2 ”when set parameters)

2.Press【→0←】and [Fn] buttons simultaneously, indicator displays “F1”

3.Press [Fn] button for three times continuously, indicator displays “F4”

4.Press 【PT】 button, indicator displays “F4.1 1 ”，press [Fn] button to choose parameter.

F4.1=0, current output 0—20mA;

F4.1=1, current output 4—20mA;

F4.1=2, voltage output 0-5V;

F4.1=3, voltage output 0—10V;

5. Press 【PT】 button, when indicator displays “F4.1 0 ”，set corresponding relations for analog output and gross weight and net weight.

F4.2=0, analog output corresponds to net weight

F4.2=1, analog output corresponds to gross weight

6. Press 【PT】 button, indicator displays “F5”

7. Press【Fn】 button, indicator displays “ESC”, press 【PT】button to exit

8. Remove the calibration plug, setting is over

5.2 Adjust bottom and top part of analog output

Calibrating four analog outputs before delivery, thus choosing mode of analog output is enough when using it. Bottom and top of analog output can be changed if necessary, for example, you can set analog output range from 1V to 4.5V.

Testing adjusting value with high-precise voltage or current meter, or connect to the former machine to adjust it directly as well.

Adjustment steps:

1. Insert calibration plug ((if not insert, it will display "E 2"when set parameters)
2. Press [Fn] and [Tare] buttons simultaneously, indicator displays "F 6".
3. Press【PT】 button continuously, indicating prompt of adjusting items can be displayed circularly.
   AL_nM : Coarse adjustment of analog output bottom
   AL_n : Fine adjustment of analog output bottom
   AL_: Elaborate adjustment of analog output bottom
   AL AH_nM: Coarse adjustment of analog output top
   AH_n: Fine adjustment of analog output top
   AH_: Elaborate adjustment of analog output top
4. Under adjusting items, press【→0←】button to increase value or press [Tare] button to reduce value
5. Press 【Fn】button to exit, remove calibration plug, setting is over.

5.3 Renew bottom and top part of analog output

Setting bottom and top of analog output as original value, when users adjust it to be disordered,you can reset quickly.

Reset method:

1. Insert calibration plug ((if not insert, it will display "E2" when set parameters)
2.Press [Fn] and [Tare] buttons simultaneously, indicator displays "F 6";
3.Press [Fn] button, indicator change to "LoAddEF"
4.Press 【PT】 button when displaying "LoAddEF", indicator displays"PASS" analog output, it will reset and renew to the original value in factory quickly
5. Press 【Fn】button to exit, remove calibration plug, setting is over.

6.0 Indicator working parameter F2

6.1 Enter working parameter choice

1.Press [Fn] and 【→0←】 buttons simultaneously, indicator displays "F 1"
2.Press [Fn] button, indicator displays "F 2"
3.Press 【PT】 button, enter into parameter choice "F2.1", each parameter choice to select parameter by pressing [Fn] button. Press 【PT】 button to next parameter choice.

6.2 Contents of function F2 choice parameter group

F2.1 choose ADC conversation speed rate

0=6.25Hz;
1=12.5Hz;
2=25Hz;
3=50Hz

F2.2 to Tare

0＝prohibition；

1=allowance　tare range 100%FS

F2.3 to clear to zero

0=prohibition

1=clear zero range ±4%FS；

2= clear zero range ±10%FS；

3= clear zero range ±20%FS；

4= clear zero range is no limited

F2.4 set zero tracking range automatically

0=prohibition

1=allowance　auto zero tracking 0.5d/second

2=allowance　auto zero tracking 1d/second

3=allowance　auto zero tracking 3d/second

F2.5 dynamic testing

0=prohibit dynamic testing

1=allowance dynamic testing sensitivity 0.5d

2=allowance dynamic testing sensitivity 1d

3=allowance dynamic testing sensitivity 3d

F2.6 numeric filter choice

Parameter has two bits of numbers, higher bit and lower bit parameter range are 0-3, and number stands for intensity of filter, number is the bigger, filter is stronger, stable time becomes longer accordingly. Press 【Fn】to choose parameter higher/lower bit, press 【→0←】to set parameters

F2.7 auto zero-set range when turn it on

0=prohibition

1=auto zero-set range ±4%FS when turn it on

2=auto zero-set range ±10%FS when turn it on

3=auto zero-set range ±20%FS when turn it on

F2.8 Auto zero-set time

Parameter range 0-15, unit “second”, “0”means prohibit auto zero-set

F2.9 Auto zero-set range

Parameter range 0-200, unit “division value

If weight is less than auto-set range, and it is stable within the auto zero-set time （>0）, the indicator auto zero-set function becomes effective.

F2.10 Creep testing sampling time

0=prohibition；

1= sampling interval 8 seconds

2= sampling interval 16 seconds

3= sampling interval 24 seconds

F2.11Creep compensation scope

0=about 0.2uV；
1= about 0.35uV；
2=about 0.5uV；
3=about 0.75uV；

F2.12 Prompt Underload

F2.12=0：Gross weight<-20d，Indicator will display “-OVER”
F2.12=1：Gross weight<0，Indicator will display “0”
F2.12=2：The indicator can display negative number

The default parameter F2.10=3，F2.11=1，means if changeable value is less than 0.35uV in 24 seconds, hen it takes changeable value as creep compensation.

7.0 Relay Output

In-built two-point relay output of indicator, action mode of relay can be set:

F5.1=0 no action of relay, F5.1=1 upper and lower limit mode, F5.1= 2 fixed value mode

F5.1=1. Upper and lower limit mode:

1＃relay: weight≤out 1 value, close
weight＞out 1 value, cut

2＃relay: weight＜out 2 value, cut
weight≥out 2 value, close

F5.1= 2. Fixed value mode:

1＃relay: weight≤out 1 value, cut
weight＞out 1 value, close

2＃relay: weight＜out 2 value, cut
weight≥out 2 value, close

7. 1 Relay output mode setting steps

1.Press【Fn】and 【→0←】 buttons simultaneously, indicator displays “F 1”。

2.Press【Fn】 button for three times, indicator displays “F 5”。

3.Press【PT】button, indicator displays “F5.1 X”，set relay output mode.

Press【Fn】button to choose parameters:

0: prohibit relay output

1: weight separate choice mode

2: fixed value mode

If user does not use relay output function, suggest setting relay output mode as 0

4. Press 【PT】 button, indicator displays “E S C”

5. Press 【PT】button, to exit

7. 2 Input preset value (relay output comparative value)

1. Press 【PT】button while working, indicator displays “SP 1”first (1# relay output comparative value),

then displays set value, if need to change it, press 【Fn】 button to move glittering position, press 【→0←】button to change value

2. Press 【PT】button, indicator displays "SP2"first (2# relay output comparative value), then displays set value, if need to change it, press 【Fn】 button to move glittering position, press 【→0←】button to change value

3. Press 【PT】button to exit.

8.0 Set Serial Interface

Serial interface can set to command mode or continuous transmit mode. Baud rate can choose 1200, 2400, 4800 or 9600. Character frame format: one start bit, one stop bit, 8 data bits, no checkout

8.1 Setup steps

1. Press [Fn] and 【→0←】 buttons simultaneously, indicator displays "F 1"

2. Press [Fn] button for two times, indicator displays "F 3"

3. Press【PT】 button, indicator displays "F3.1 X", parameter X stands for baud rate,

press [Fn] button to choose parameters:

F3.1=0, 1200 baud rate

F3.1=1, 2400 baud rate

F3.1=2, 4800 baud rate

F3.1=3, 9600 baud rate

F3.1=4, 19200 baud rate

4.Press 【PT】 button, indicator displays "F3.2 X", press 【Fn】to choose parameters

F3.2=0, command mode (communication protocol refer to Appendix 1)

F3.2=1, continuous transmit mode(communication protocol refer to Appendix 2)

F3.2=2, command mode (communication protocol refer to Appendix 3)

5.Press 【PT】 button, indicator displays "F3.3 XXX"

XXX means the address of this indicator when multi-indicators are communicated together, address range 00-99. Press 【→0←】 or [Tare] to change present address.

6.Press 【PT】button, indicator displays "F3.4 X"

0: Transmit the weight data

1: Transmit the number of division of the weight data

This choice is effective only in command communication mode Choose "1" when the data of weight includes decimal or the weight is bigger than 32767kg.

7.Press 【PT】button, indicator displays "F4"

8.Press 【Fn】button for two times, and press 【PT】button to exit when indicator displays "ESC

9.0 Power On Self-Test Information

Turn on the indicator after all the system be connected correctly, firstly indicator displays number "0"—"9", and then displays analog output mode. 4-20 stands for 4-20mA output Then displays preset baud rate "b-XXXXX"；

10.0 Error Indication

E2: restriction for button operation, operating weight calibration, change analog under hardware protection

E4: sensitivity is small, uV value of each division is less than 0.5uV, only appears in calibration

E6: calibration data checkout is incorrect

E7: weights data input is incorrect

E8: signal wire is connected in reverse

E9: non-linearity calibration parameters is abnormal

_Mo_: operation is incorrect, if weight is unstable, exceed zero-set range, press 【→0←】 or 【Tare】

OUEr: overloading indicating

AdCErr: indicator ADC is damaged

11.0 General Malfunction Solution

Phenomenon 1: Nothing is displayed after indicator is electrified.

Solution: 1. Check power supply

2. Check fuse

Phenomenon 2: Data is not stable after indicator self-testing

Solution: 1. Check load cell plug, if they are connected correctly

2. Check power supply voltage, if it is in the regulated range

3. Check feedback wire, if it is connected well

Phenomenon 3: No analog output

Solution: 1. Check mode of analog output if it is correct

2. Check wire connection of analog output end if it is correct

3. Turn to set-up choice 5.2 adjustment of bottom and top of analog output, to check if corresponding analog value of analog output bottom and top is correct

Phenomenon 4: No data of serial interface

Solution: 1. Check if baud rate is the same as that of former machine.

2. Check if serial interface is continuous transmit mode

Phenomenon 5: No action of rely

Solution: 1. Check comparative value of out 1 and out 2

2. Check working mode of relay (not work, weight separate selection or fixed value mode)

Phenomenon 6: Indicator displays OUEr

Solution: 1. Check if it is overloading for scale platform

2. Check if cable is open or short circuit

Phenomenon 7: Indicator displays AdCErr

Solution: 1. Check if cable is short circuit

2. Test load cell excitation voltage if it is 5V, if not, it means that the excitation voltage circuit is damaged, replacement is necessary

3. Power supply and cable are normal, it means that indicator ADC circuit is damaged, replacement is necessary

Appendix 1 MODBUS Compatible Communication Mode

Parameter [3.2 = 0], choose Modbus compatible communication mode, bus-line can choose RS232 or RS485 only, chosen by internal jumper. Serial port data fix 8 bits, no checkout, 1 stop bit, baud rate can be selective. MODBUS is a network protocol with Master-Slave form; the weighing terminal is called by the host system as slave station in the MODBUS network. Data mode is RTU, support 03, 06 and 16 functions.

Holding Register 40001, the data address is Register 0000 in the information. Function code area, in order to keep operation regulated by Register type, therefore, “4XXXX” is default address type.

For example: Holding Register 40001, Addressing Register is 0000 hex (+ hex 0), Holding Register 40011, Addressing Register is 000A hex (10 hex 10)

By function 03, it can read 2 continuous internal register at most one times. 16 function can write 2 continuous register every time.

The mapped address of weighing data in Modbus:

Address		Specification	Remarks
40001		Gross weight(with symbol, 16 bits)-32768~32767（Remarks 1）	Read-only（function code 03）
40002		Net weight(with symbol, 16 bits)-32768~32767（Remarks 1）	Read-only（function code 03）
40003-40004		Gross weight（long integer）	Read-only（function code 03）
40005-40006		Net weight（long integer）	Read-only（function code 03）
40007		Division value（1，2，5，10，20，50）	Read-only（function code 03）
40008		Decimal value （0，1，2，3）	Read-only（function code 03）
40009-40010		Fixed value point 1（SP1），written data, simultaneously write internal EEOROM,	Read-write（function code 03，16）
40011-40012		Fixed value point 2（SP2），written data, simultaneously write internal EEOROM,	Read-write（function code 03，16）
40013-40014		Fixed value point 1（SP1），written data is lost when power-off, suggest to change frequently for using	Write （function code 16）
40015-40016		Fixed value point 1（SP1），written data is lost when power-off, suggest to change frequently for using	Write （function code 16）
40097	Bit 0	Clear zero (1 available)	Write-only（function code 06）
	Bit 1	Tare (1 available)	Write-only（function code 06）
	Bit 2	Clear tare (1 available)	Write-only（function code 06）
	Other unused		

Remarks 1: When weighing data contains decimal or exceeds integer data represents range（＞32767），it can read division, division is the weight divides division value, and then multiply decimal factor 10-x,

finally get the weight. Or it can read long integer represents weighing data directly, multiply decimal factor 10-x, and finally get the weight.
For example: current weight is 876.8kg, division value is 0.2kg, so the read division is 876.8/0.2=4384; division value is 2, decimal is 1, means only one decimal fraction. So the weight is : 4384×2×10-1=876.8kg。

Communication example: for example, indicator address is 01, gross weight of indicator is 42kg, so the host system will transmit command for reading gross weight:
0x01 0x03 0x00 0x00 0x00 0x01 0x84 0x0A
Indicator return：0x01 0x03 0x02 0x00 0x2A 0x39 0x3B
The host system transmits command for tare：0x01 0x06 0x00 0x60 0x00 0x02 0x08 0x15
Indicator return：0x01 0x06 0x00 0x60 0x00 0x02 0x08 0x15

Appendix 2 Communication Protocol 2 --- Continuous Transmit Mode

Baud rate：1200/2400/4800/9600（optional）

8 bits of data, 1 start bit, 1 stop bit, no checkout

The data appear on bus-line of RS232 and RS485 simultaneously. The data are the same as weight value displayed by indicator. Each group of data includes 8 frames, the first frame is the data start frame "＝", the following 7 bits are data frames, invalid zero of higher bit is filled with"0", if the displayed value is negative, the highest bit of data frames transmits "－"

Start character	Symbol	Weight							
=	0 or —	High bit					Low bit	0D	0A

For example：

Indicator displays ："12345"， serial port transmit data "＝0012345"

Start character	Symbol	Weight							
=	0	0	1	2	3	4	5	0D	0A

Indicator displays："1234.5"，serial port transmit data"＝01234.5"；

Start character	Symbol	Weight							
=	0	1	2	3	4	.	5	0D	0A

Appendix 3 Communication with command

Instrument support the master-slave communications， more than one meter can be hanging on a RS485 bus, the instrument as a slave is in response to the host computer command.

1. The host computer command：

Command Packet	Byte0	Byte1	Byte2	Byte3	Byte4	Byte5	Byte6	Byte7	Byte8
Content	0X02	ADDR	WORD0		COMM0	COMM1	BCC	0X0D	0X0A
Definition	The start marker	Communication Address	preset value (Note 1)		Command (Note 2)		checksum (Note 3)	carriage return	newline

COMM0(Byte4):

Note 1: WORD0 is a signed integer, value range -32768 ~ 32767, Byte2 is the high halfword, Byte3 is the lower half of the words.

The preset value can be the actual weight (F3.4 = 0), can also be a degree of weight (F3.4 = 1).

Note 2: command byte COMM0 (Byte4) and

Position	Content definition
0	1：When the XK3101 load preset points 1,2, this value will permanently be saved. When the XK3101 load preset points 1,2, this value will not permanently be saved, the original preset point will be restore next time.
1~5	Undefined
6	When the bit 0 is set to 1, the word 1 will be used as the preset 2 and loaded into XK3101 Note: point 2 preset values are not permanently saved unless write in by bit 0 of the byte
7	When the bit 0 is set to 1, the word 1 will be used as the preset point 1 and loaded into XK3101. Note: point 1 preset values are not permanently saved unless write in by bit 0 of the byte

Ⅱ the command byte COMM1 (Byte5)

Position	The definition of content
0	000: requires (XK3101) transmission of GW 001: Requires (XK3101) transmission of NW 010: Requires (XK3101) transmission of weight 011: Requires (XK3101) transmission of tare 100: Requires (XK3101) transmission of preset value 1 101: Requires (XK3101) transmission of preset value 2 Other: undefined
1	
2	
3	undefined
4	When this bit is set 1 from 0, the instrument perform Clear tare instruction
5	When this bit is set 1 from 0, the instrument perform tare instruction
6	undefined
7	When the bit set 1 from 0,the instrument perform Zero instruction

Note 3: checksum is Byte0 ~ Byte5 accumulation low bytes.

2. Instrument return data

Data Packet	Byte0	Byte1	Byte2	Byte3	Byte4	Byte5	Byte6	Byte7	Byte8
Content	0X02	ADDR	WORD0		State0	State1	BCC	0X0D	0X0A
Definition	start flag	address	weight or preset value (Note 1)		State (Note 2)		Checksum (Note 3)	carriage return	newline

Note 1: WORD0 is a signed integer, value range -32768 ~ 32767, Byte2 is the high halfword, Byte3 the lower half of the words.WORD0 is weight value or a preset value, which may likewise be the actual weight (F3.4 = 0) or the divisions of weight(F3.4 = 1).

Note 2:

(I) status information bytes State0 (Byte4)

position	Contents Definition
0~3	undefined
4	1：Scale Dynamic 0: scale stable
5	1: NW State 0: GW state
6~7	undefined

Ⅱ status information bytes State1（Byte5）

position	Contents Definition
0	Preset point 1 output status
1	Preset point 2 output status
2~7	undefined

☺ 4903109019

Ver：201209 V1.0